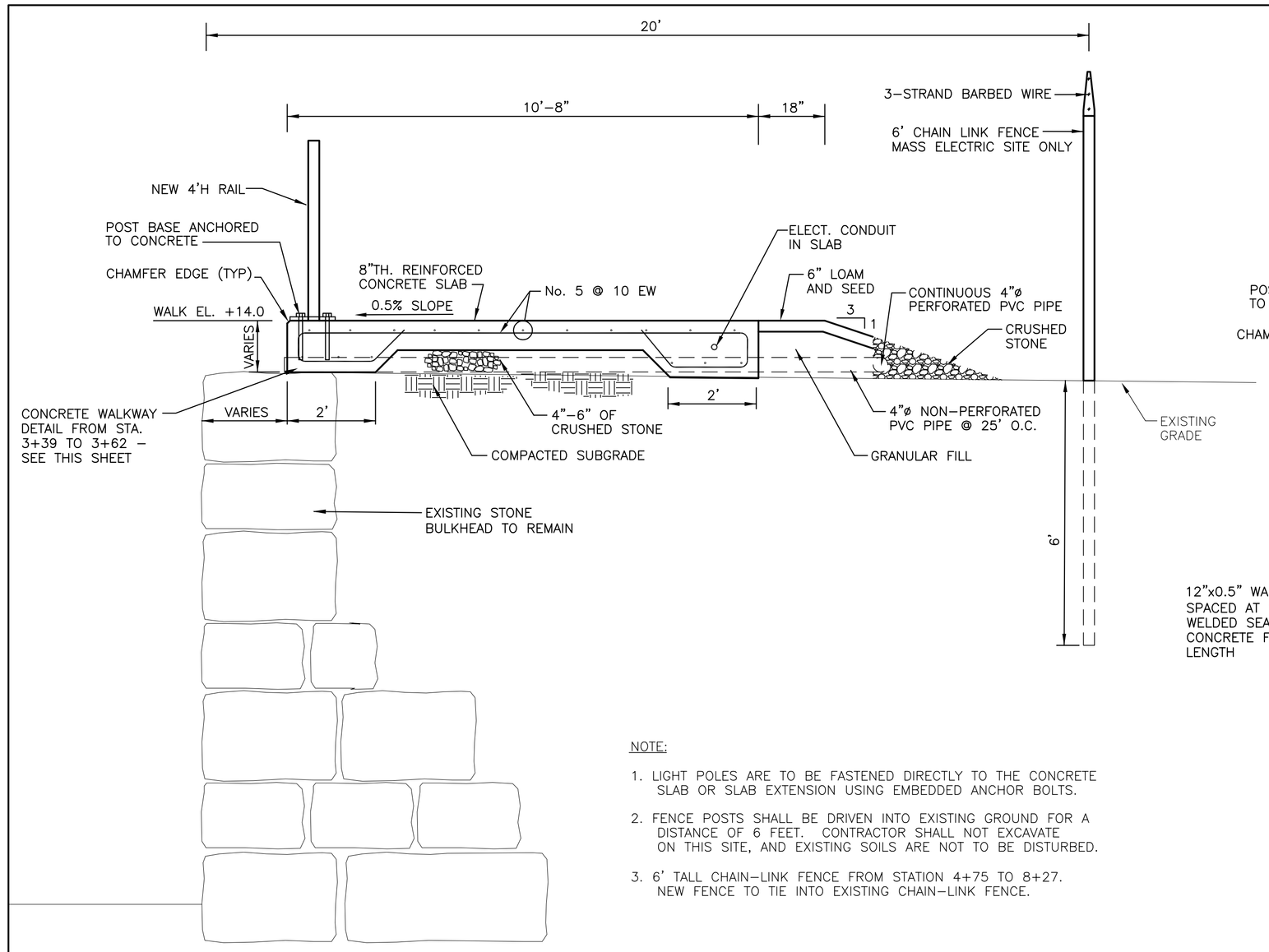

NOTE:

1. LIGHT POLES ARE TO BE FASTENED DIRECTLY TO THE CONCRETE SLAB OR SLAB EXTENSION USING EMBEDDED ANCHOR BOLTS.
2. FENCE POSTS SHALL BE DRIVEN INTO EXISTING GROUND FOR A DISTANCE OF 6 FEET. CONTRACTOR SHALL NOT EXCAVATE ON THIS SITE, AND EXISTING SOILS ARE NOT TO BE DISTURBED.
3. 6' TALL CHAIN-LINK FENCE FROM STATION 4+75 TO 8+27. NEW FENCE TO TIE INTO EXISTING CHAIN-LINK FENCE.

WALKWAY SECTION - STA. 2+10 TO 3+95.5 AND STA. 6+35 TO 8+86

SCALE: 1"=2'

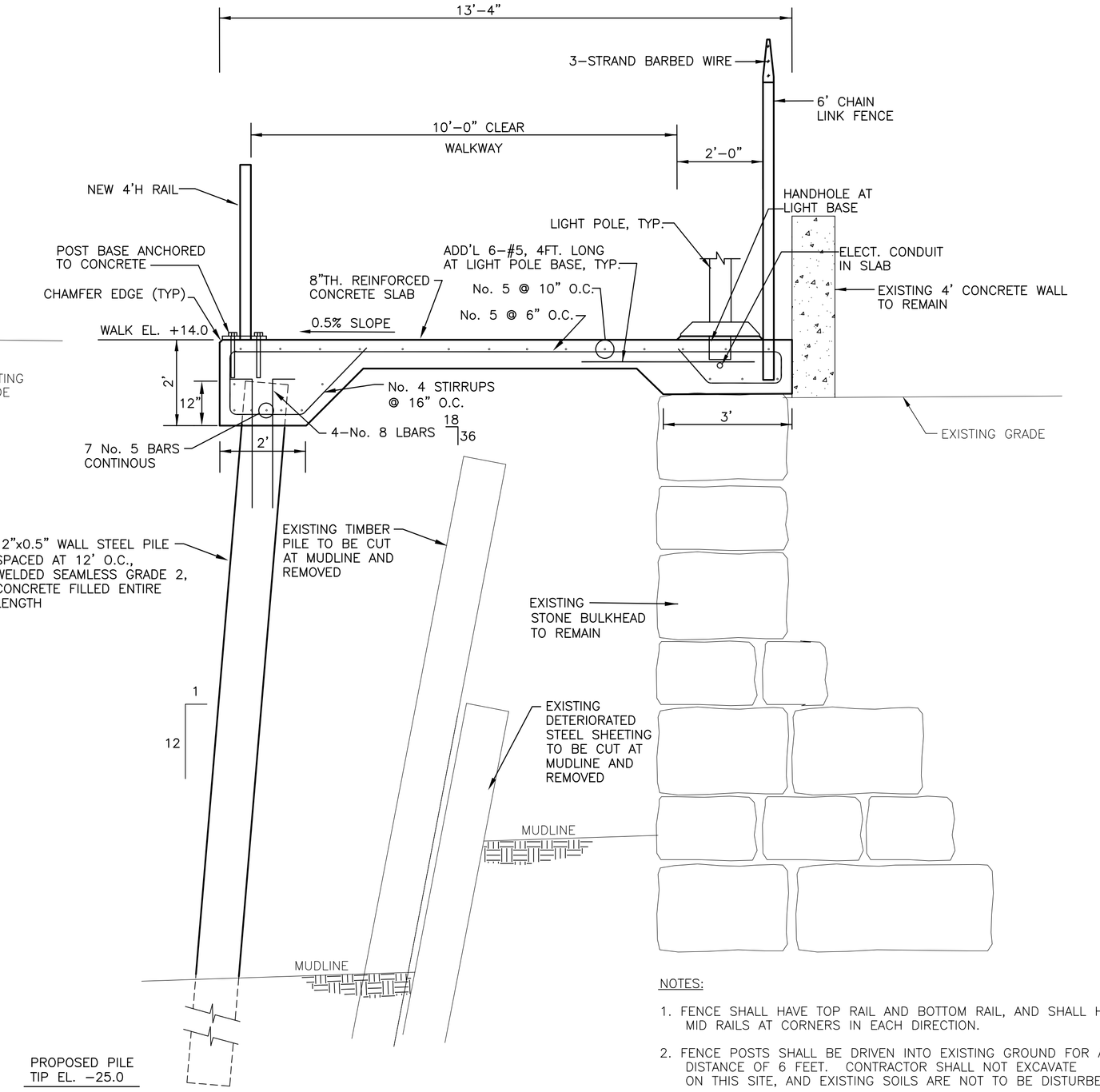

NOTES:

1. FENCE SHALL HAVE TOP RAIL AND BOTTOM RAIL, AND SHALL HAVE MID RAILS AT CORNERS IN EACH DIRECTION.
2. FENCE POSTS SHALL BE DRIVEN INTO EXISTING GROUND FOR A DISTANCE OF 6 FEET. CONTRACTOR SHALL NOT EXCAVATE ON THIS SITE, AND EXISTING SOILS ARE NOT TO BE DISTURBED.
3. LIGHT POLES ARE TO BE FASTENED DIRECTLY TO THE CONCRETE SLAB USING EMBEDDED ANCHOR BOLTS AT THIS SITE ONLY.

WALKWAY SECTION @ MASS ELECTRIC - STA 3+95.5 TO 6+35

SCALE: 1"=2'

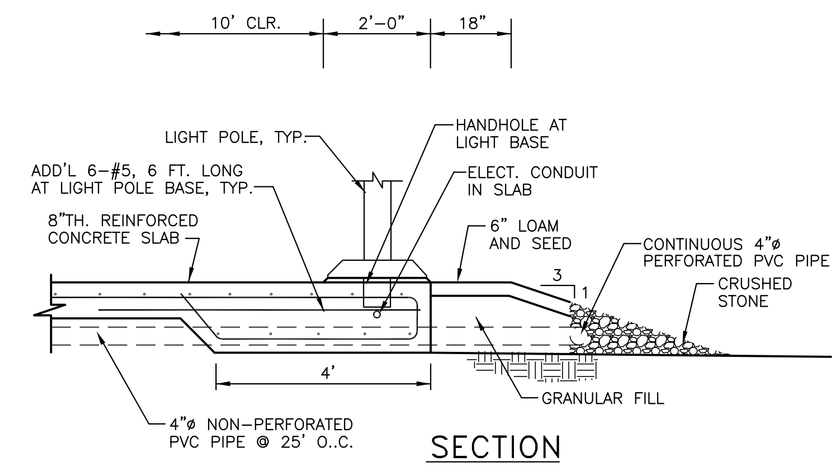

SECTION

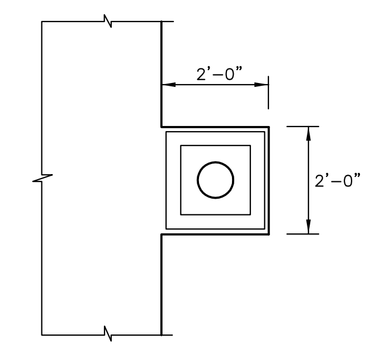

PLAN

TYPICAL WALKWAY @ LIGHT POLES

SCALE: 1"=2'

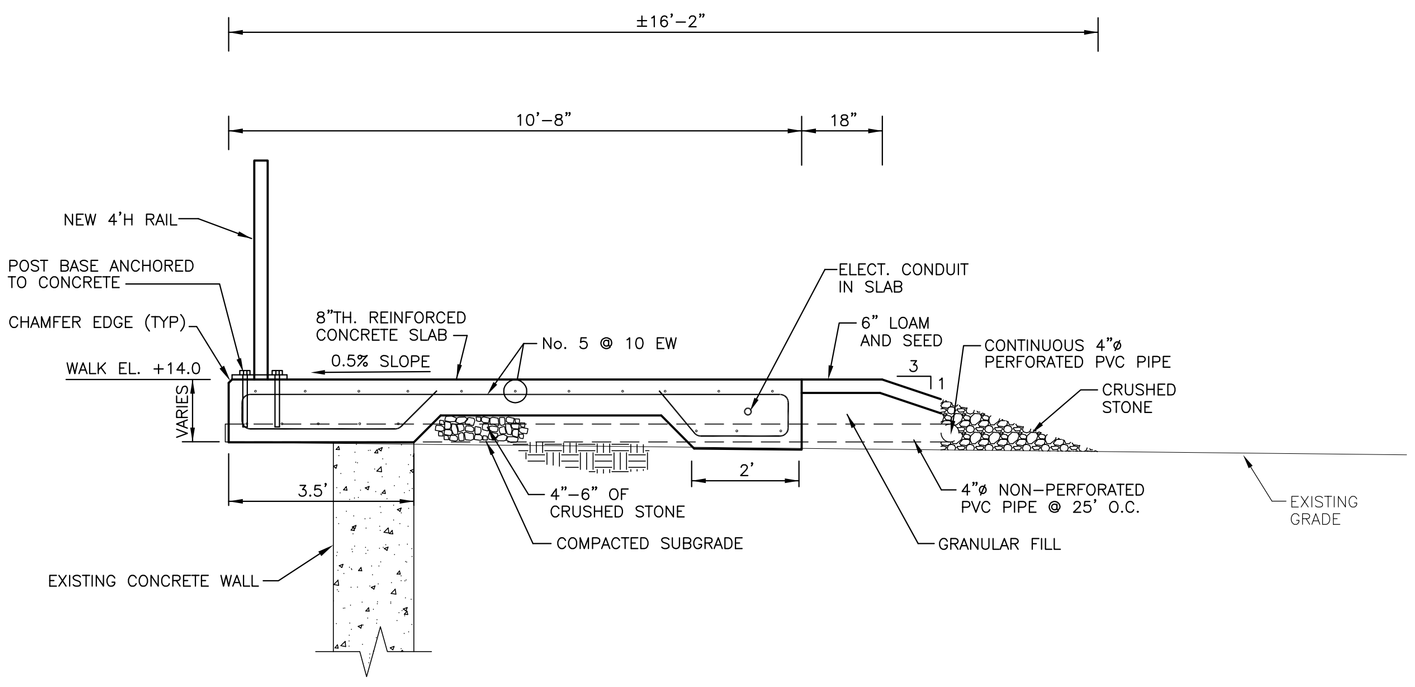

WALKWAY SECTION - STA. 3+39 TO 3+62

SCALE: 1"=2'

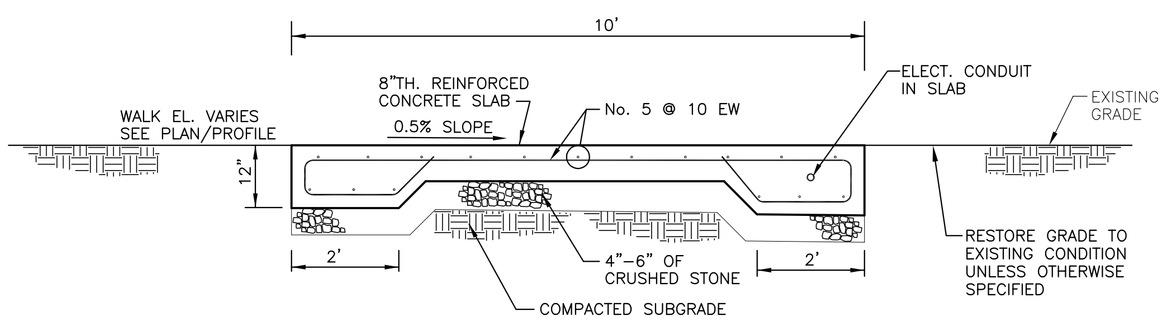

WALKWAY SECTION - STA. 0+31 TO 1+05

SCALE: 1"=2'

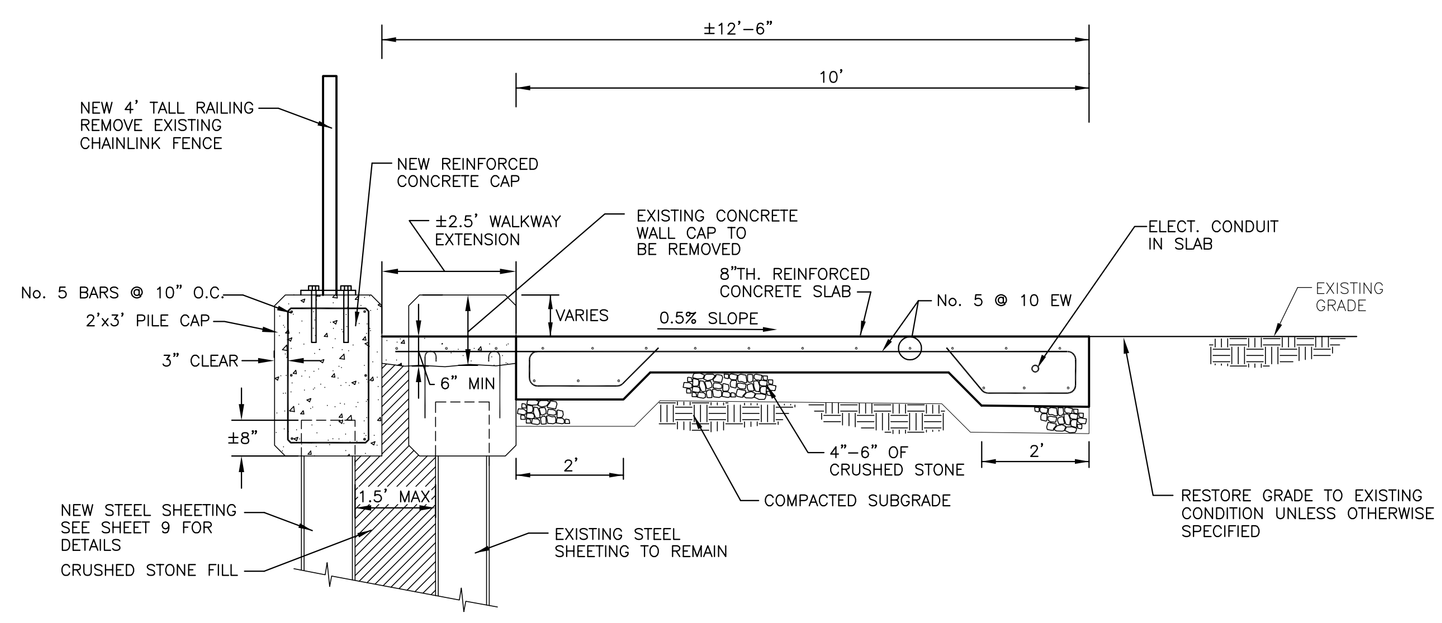

WALKWAY SECTION - STA. 1+05 TO 2+10

SCALE: 1"=2'

0 2 4
SCALE IN FEET

ISSUED FOR DRAFT
NOT FOR CONSTRUCTION
DATE ISSUED: AUG. 2008
VINE ASSOCIATES, INC.

SECTIONS AND DETAILS

SALEM HARBORWALK
DERBY STREET TO CONGRESS STREET
SALEM, MASSACHUSETTS

Vine ASSOCIATES, INC.
372 MERRIMAC STREET NEWBURYPORT, MA 01950 tel. (978)465-1428 fax (978)465-2640
190 OLD DERBY STREET HINGHAM, MA 02043 tel. (781)749-2530 fax (781)749-2751
18 BEACH STREET MONUMENT BEACH, MA. 02553 tel. (508)743-0390 fax (508)743-0391

DES. VAL	CHK. DBV	DR. RSR	VAI FILE NO. 1117\Details
SCALE AS SHOWN	APP'D DBV	DATE AUG. 2008	SHEET 6